M12 male front mount plug connector

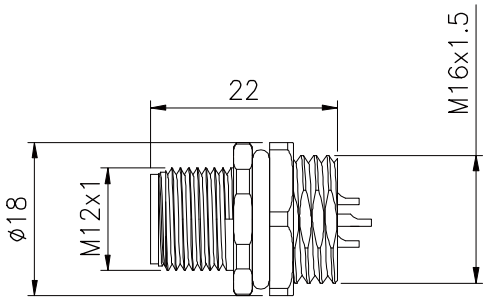

Technical parameters

Shell material	Copper/Zinc
Core material	PA66
Overmold material	PVC/TPU①
Terminal material	Phosphor copper
Temperature	−40℃～+80℃

Insulation resistance	≥100mΩ
Contact resistance	≤10mΩ
Degree of protection	IP67/IP68
Mating cycle	≥500次
Cable diameter	

Electric parameter

pin number	code type				rated current	rated voltage		cable size		cable material	dealing at the end cable
	A	B	C	D		A/C	D/C	AWG	mm²		
2					4A	250V	250V	22	0.34	PVC/PUR	- no dealing - customized - strip and tinn - to other connector
3					4A	250V	250V	22	0.34	PVC/PUR	
4			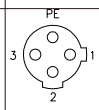		4A	250V	250V	22	0.34	PVC/PUR	
5					4A	60V	60V	22	0.34	PVC/PUR	
6					2A	30V	30V	24	0.25	PVC/PUR	
8					2A	30V	30V	24	0.25	PVC/PUR	
12					1.5A	30V	30V	26	0.14	PVC/PUR	
17	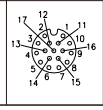				1.5A	30V	30V	26	0.14	PVC/PUR	

Order method

Ⓐ Regular type

M12-[ ]-B-[ ]-P-[ ]-[ ]-[ ]

pin number; code type (except A type); cable material②; cable length; others

Ⓑ Customomized

M12 -[ ]-B-[ ]-P-[ ]-[ ]

pin number; code type (except A type); customized item number; others